ODL, Inc.

SMART FRAME
DOOR GLASS ASSEMBLY FOR GLAZING UP TO A 3'0 x 8'0 SINGLE PANEL "NON-IMPACT"

GENERAL NOTES

1. This product has been evaluated and is in compliance with the 9th Edition (2026) Florida Building Code (FBC) structural requirements including the High Velocity Hurricane Zone (HVHZ).
2. When used in the "HVHZ" this product is required to be protected with an impact resistant covering that complies with Section 1626 of the FBC.
3. This product is approved for use as a substitute doorglass assembly in conjunction with a glazed steel or fiberglass side hinged swing door and/or fixed sidelite possessing a comparable current Florida Statewide product approval.
4. The design pressure (DP) rating shall be the lesser of the DP rating shown on sheet 1 of this approval or the DP rating shown in the glazed steel or fiberglass side hinged swing door or fixed sidelite approval being used.
5. The door panel and lite opening size shall not exceed the sizes shown in this approval or the glazed steel or fiberglass side hinged swing door or fixed sidelite approval being used.
6. This product has been tested in the door and/or sidelite panels as specified on sheets 3 & 4 of this approval. Substitution into a similar product may be approved for use by the local Authority Having Jurisdiction. In all cases, the glazed steel or fiberglass door and/or sidelite used must possess a comparable current Florida Statewide product approval.

TABLE OF CONTENTS

SHEET #	DESCRIPTION
1	Typical elevations, design pressures and general notes
2	Cross sections and glazing details
3	Fiberglass door panels
4	Steel door panels

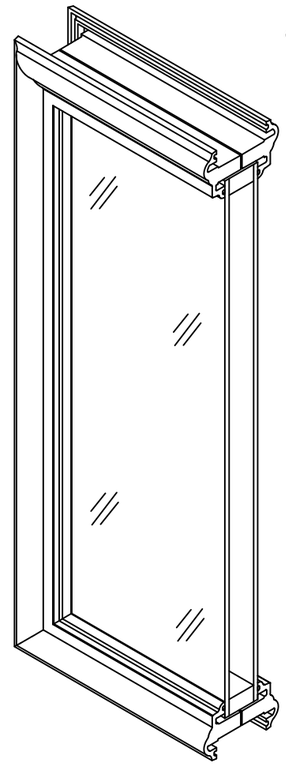

SMART FRAME DOORGLASS ASSEMBLY

L.F. SCHMIDT LICENSE No. 43409 STATE OF FLORIDA PROFESSIONAL ENGINEER

Digitally signed by Lyndon F Schmidt
Date: 2026.07.16 09:16:44 -04'00'

This item has been digitally signed and sealed by **L. F. Schmidt, P.E.** on the date adjacent to the seal.

Printed copies of this document are not considered signed and sealed and the signature must be verified on any electronic copies.

THIS PRODUCT APPROVAL IS VALID ONLY FOR THE STATE OF FLORIDA

SMART FRAME DESIGN PRESSURE RATING (PSF)		
GLAZING TYPE TEMPERED	POSITIVE	NEGATIVE
1" INSUL.	+60.0	-60.0

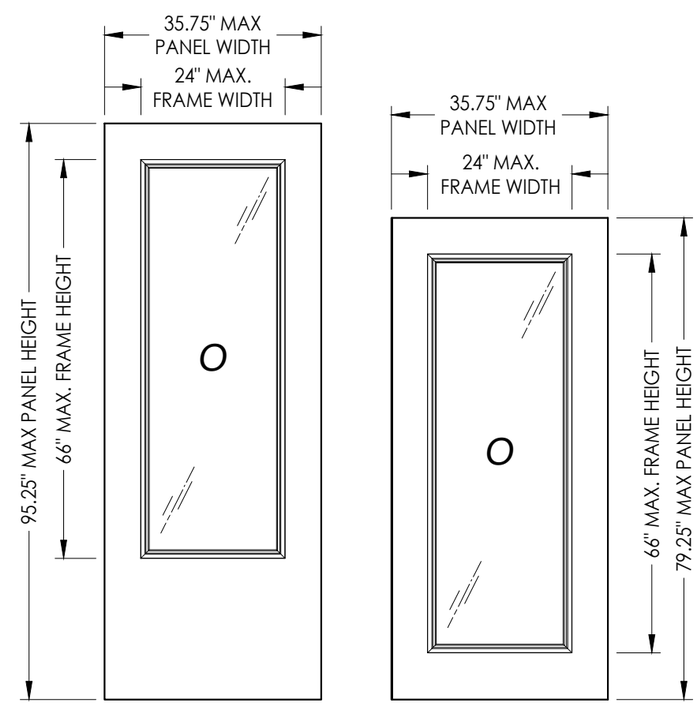

Documents Prepared By:
Lyndon F. Schmidt
P.E. No. 43409

RW BUILDING CONSULTANTS, INC.
P.O. Box 230, Valrico, FL 33595
Phone No.: 813.659.9197
FBPE Registry No. 9813

PRODUCT: SMART FRAME

PART OR ASSEMBLY: TYPICAL ELEVATIONS, DESIGN PRESSURES & GENERAL NOTES

NO.	DATE	REVISIONS	BY
5	7/01/26	UPDATE TO 9TH ED. (2026) FBC	LFS
4	7/01/23	UPDATE TO 8TH ED. (2023) FBC	LFS
3	8/05/20	UPDATE TO 6TH ED. (2017) FBC	DAC
2	10/10/18	ADD SMART FRAME DETAILS	LFS
1	9/26/17	UPDATE TO 6TH ED. (2017) FBC	JK

DATE: 3/31/15
SCALE: N.T.S.
DWG. BY: JK
CHK. BY: LFS
DRAWING NO.: FL-15260.14
SHEET 1 OF 4

© 2015 R.W. BUILDING CONSULTANTS INC.

G:\ODL\FL-15260 R12\FL-15260.14.dwg

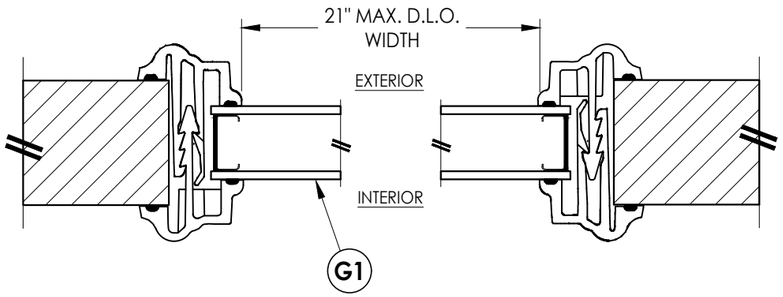

2/2 **HORIZONTAL CROSS SECTION**

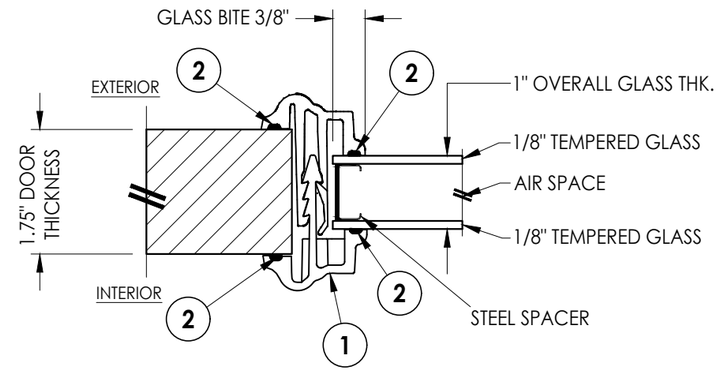

G1 **GLAZING DETAIL**

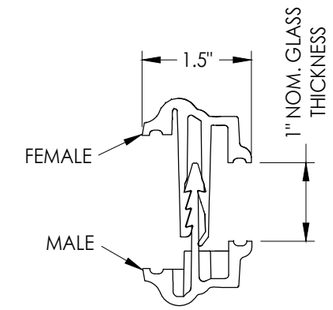

ODL SMART FRAME
HP POLYPROPYLENE

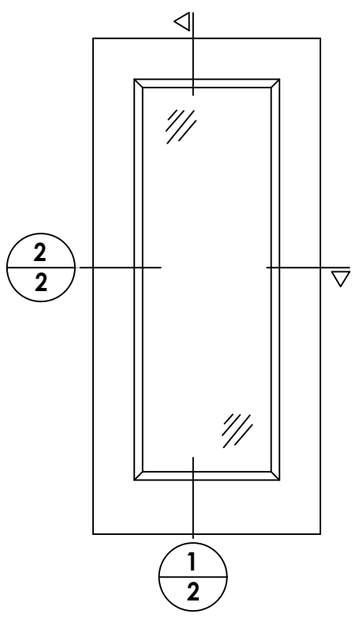

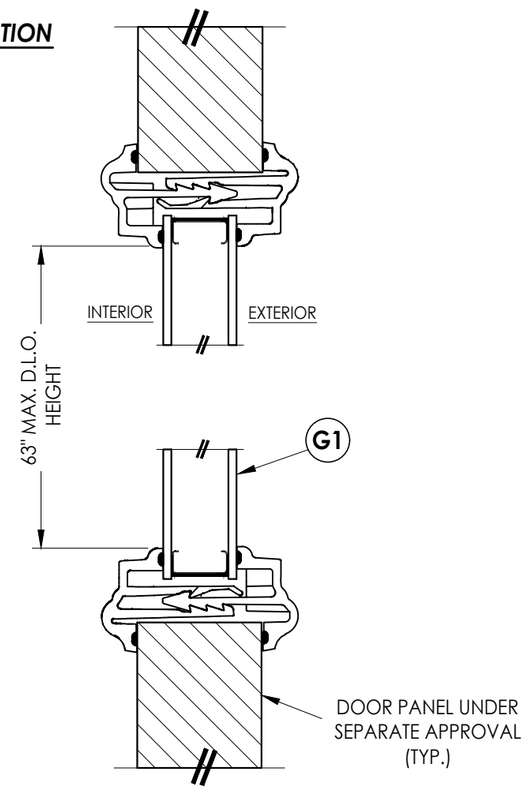

1/2 **VERTICAL CROSS SECTION**

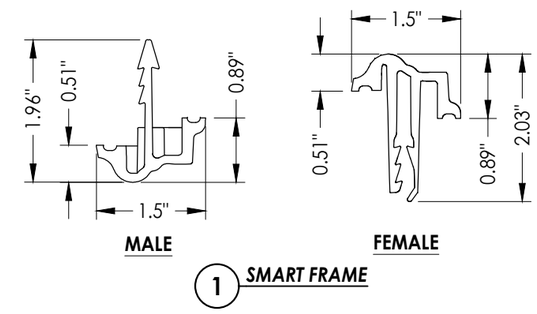

1 **SMART FRAME**

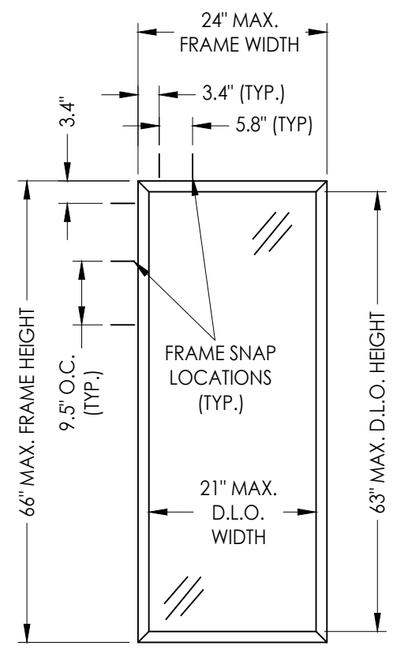

24" x 66" SMART FRAME DOORGLASS

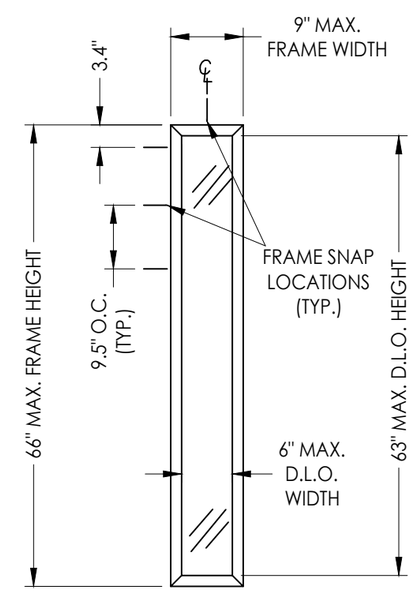

9" x 66" SMART FRAME DOORGLASS

BILL OF MATERIALS

ITEM #	DESCRIPTION	MATERIAL
1	ODL SMART FRAME	HP POLYPRO
2	FOAM-IN-PLACE GASKET	URETHANE

Documents Prepared By:
Lyndon F. Schmidt
P.E. No. 43409
R.W. BUILDING CONSULTANTS, INC.
P.O. Box 230, Valrico, FL 33595
Phone No.: 813.659.9197
FBPE Registry No. 9813

PRODUCT: SMART FRAME

PART OR ASSEMBLY: CROSS SECTIONS & GLAZING DETAILS

REVISIONS

NO.	DATE		BY
5	7/01/26	UPDATE TO 9TH ED. (2026) FBC	LFS
4	7/01/23	UPDATE TO 8TH ED. (2023) FBC	LFS
3	8/05/20	UPDATE TO 6TH ED. (2017) FBC	DAC
2	10/10/18	ADD SMART FRAME DETAILS	LFS
1	9/26/17	UPDATE TO 6TH ED. (2017) FBC	JK

DATE: 3/31/15
SCALE: N.T.S.
DWG. BY: JK
CHK. BY: LFS
DRAWING NO.: FL-15260.14
SHEET 2 OF 4

© 2015 R.W. BUILDING CONSULTANTS INC.

G:\ODL\FL-15260 R12\FL-15260.14.dwg

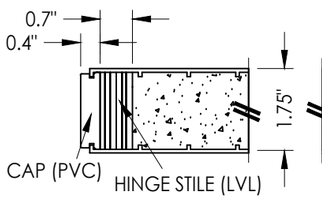

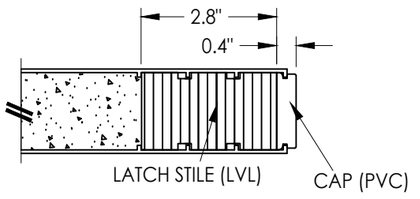

SECTION A-A

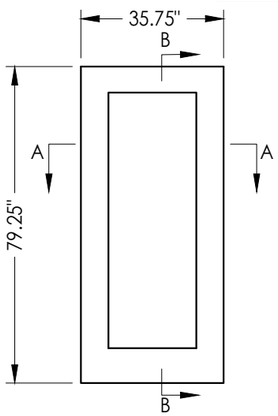

FIBERGLASS DOOR PANEL
Plastpro 6' 8"

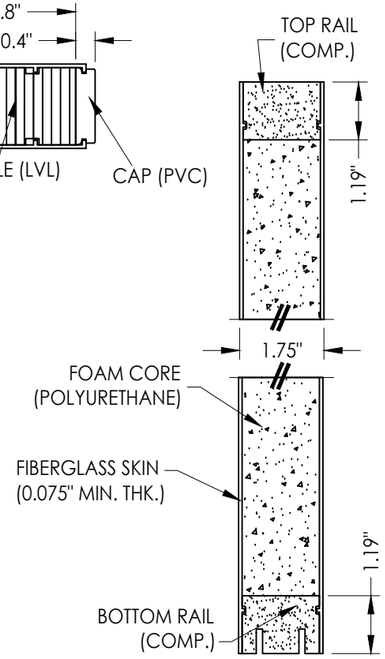

SECTION B-B

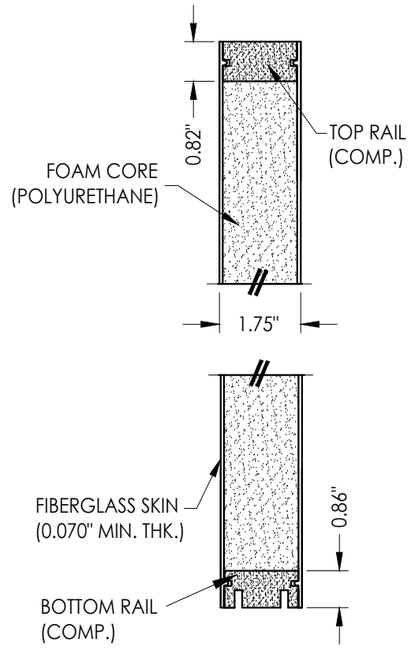

SECTION D-D

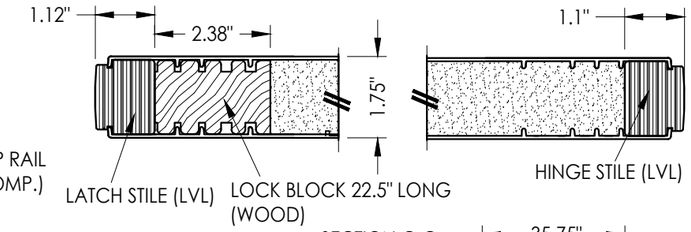

SECTION C-C

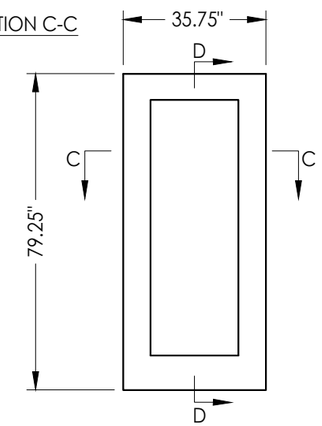

FIBERGLASS DOOR PANEL
Therma Tru 6' 8"

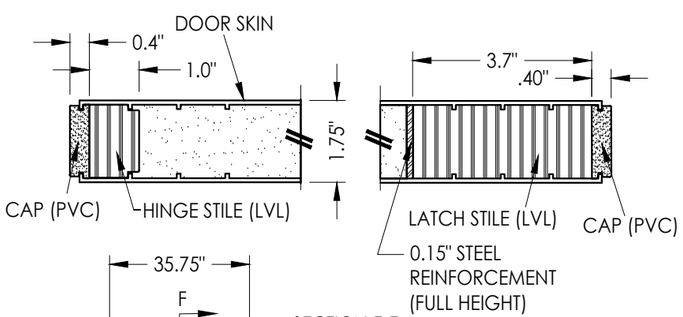

SECTION E-E

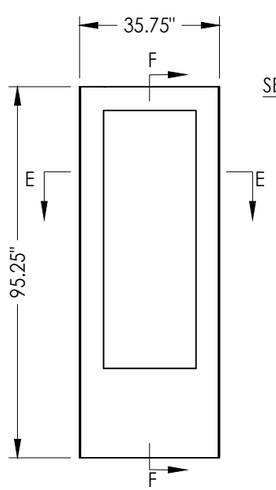

FIBERGLASS DOOR PANEL
Plastpro 8'

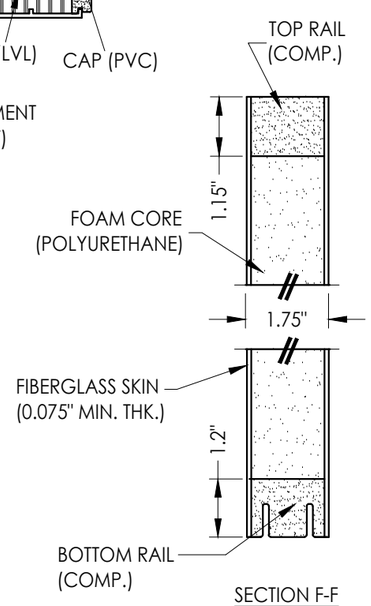

SECTION F-F

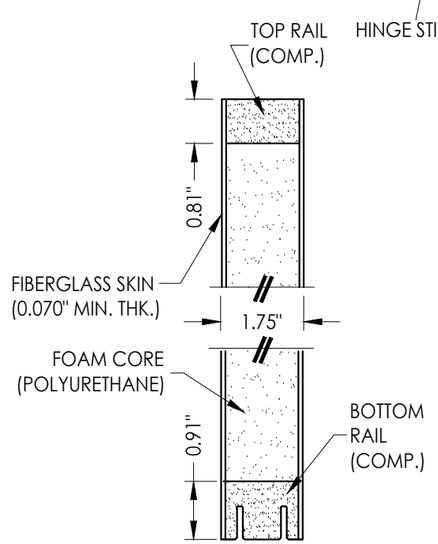

SECTION H-H

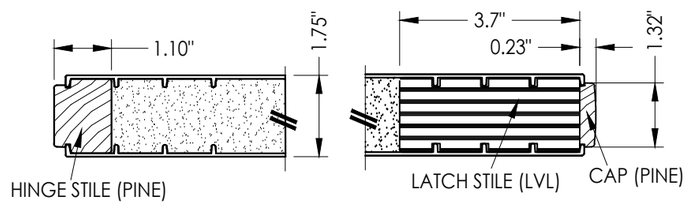

SECTION G-G

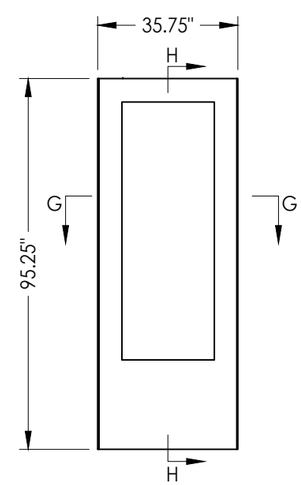

FIBERGLASS DOOR PANEL
Therma Tru 8'

Documents Prepared By:
Lyndon F. Schmidt
P.E. No. 43409

R.W. BUILDING CONSULTANTS, INC.
P.O. Box 230, Valrico, FL 33595
Phone No.: 813.659.9197
FBPE Registry No. 9813

PRODUCT: SMART FRAME

PART OR ASSEMBLY: FIBERGLASS DOOR PANELS

REVISIONS

NO.	DATE		BY
5	7/01/26	UPDATE TO 9TH ED. (2026) FBC	LFS
4	7/01/23	UPDATE TO 8TH ED. (2023) FBC	LFS
3	8/05/20	UPDATE TO 6TH ED. (2017) FBC	DAC
2	10/10/18	ADD SMART FRAME DETAILS	LFS
1	9/26/17	UPDATE TO 6TH ED. (2017) FBC	JK

DATE: 3/31/15
SCALE: N.T.S.
DWG. BY: JK
CHK. BY: LFS
DRAWING NO.: FL-15260.14
SHEET 3 OF 4

© 2015 R.W. BUILDING CONSULTANTS INC.

G:\ODL\FL-15260 R12\FL-15260.14.dwg

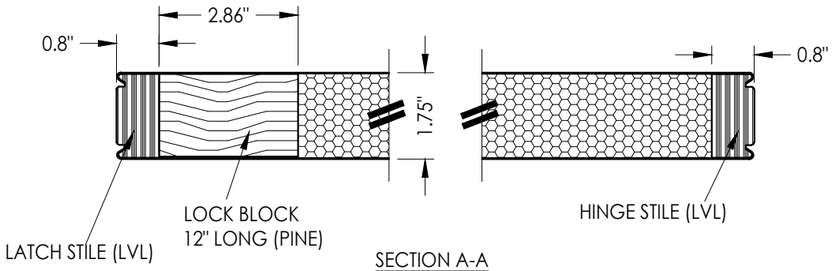

SECTION A-A

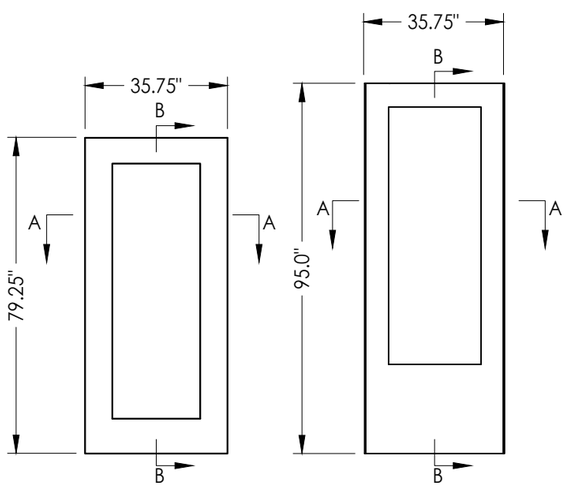

STEEL DOOR PANEL
Masonite 6' 8"

STEEL DOOR PANEL
Masonite 8'

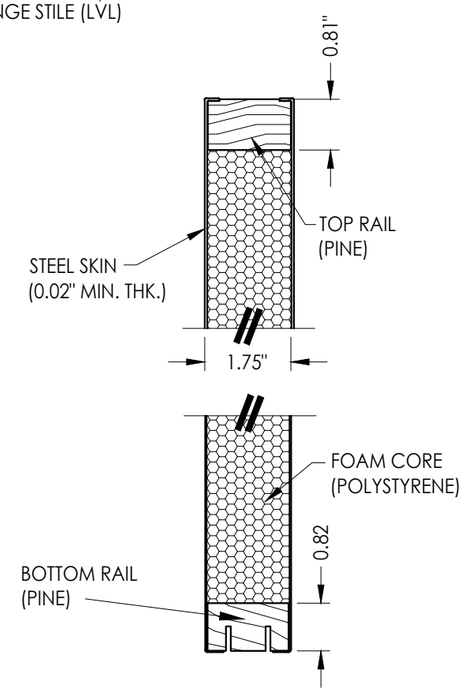

SECTION B-B

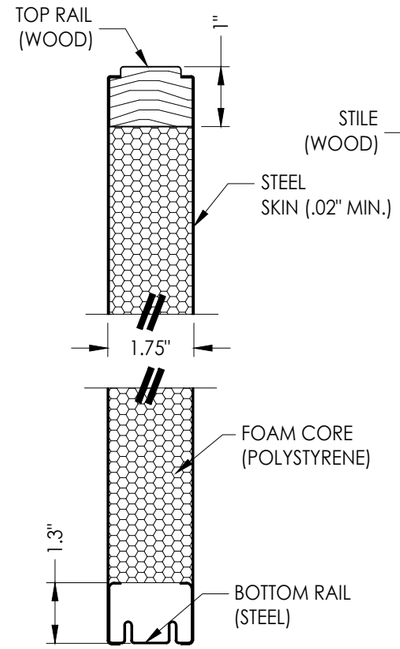

SECTION D-D

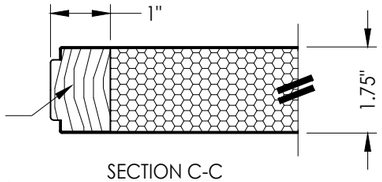

SECTION C-C

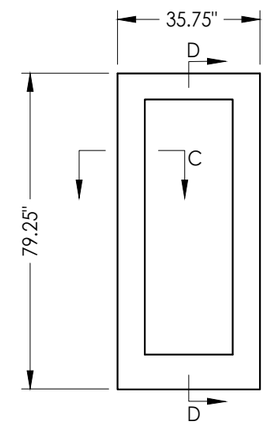

STEEL DOOR PANEL
JELD-WEN 6' 8"

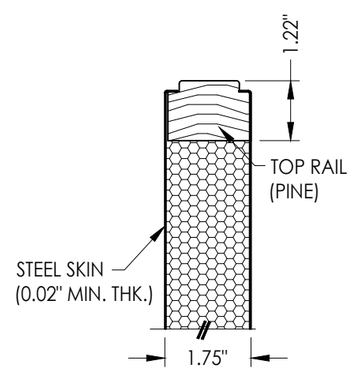

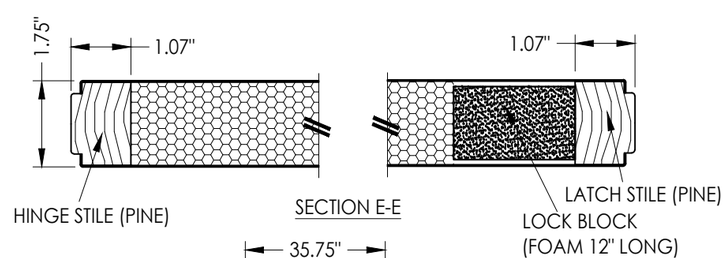

SECTION E-E

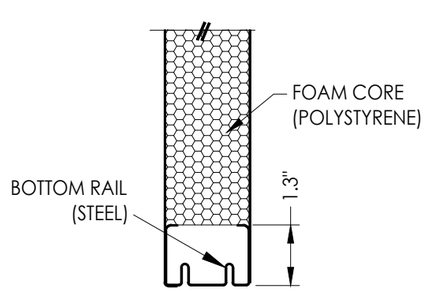

SECTION F-F

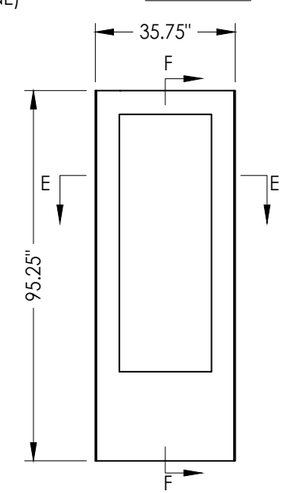

STEEL DOOR PANEL
JELD-WEN 8'

Documents Prepared By:
Lyndon F. Schmidt
P.E. No. 43409

RW BUILDING CONSULTANTS, INC.
P.O. Box 230, Valrico, FL 33595
Phone No.: 813.659.9197
FBPE Registry No. 9813

PRODUCT: SMART FRAME

PART OR ASSEMBLY: STEEL DOOR PANELS

REVISIONS

NO.	DATE		BY
5	7/01/26	UPDATE TO 9TH ED. (2026) FBC	LFS
4	7/01/23	UPDATE TO 8TH ED. (2023) FBC	LFS
3	8/05/20	UPDATE TO 6TH ED. (2017) FBC	DAC
2	10/10/18	ADD SMART FRAME DETAILS	LFS
1	9/26/17	UPDATE TO 6TH ED. (2017) FBC	JK

DATE: 3/31/15
SCALE: N.T.S.
DWG. BY: JK
CHK. BY: LFS
DRAWING NO.: FL-15260.14
SHEET 4 OF 4

© 2015 R.W. BUILDING CONSULTANTS INC.

G:\ODL\FL-15260 R12\FL-15260.14.dwg